THIS DOCUMENT AND THE DATA DISCLOSED HEREIN OR HEREWITH IS THE PROPERTY OF ALTIUM LIMITED AND MAY BE FREELY DISTRIBUTED IN WHOLE. NO RIGHTS ARE RESERVED OR EXPRESS OR IMPLIED WARANTEE GIVEN.

REVISION	DESCRIPTION	DATE	APPROVED

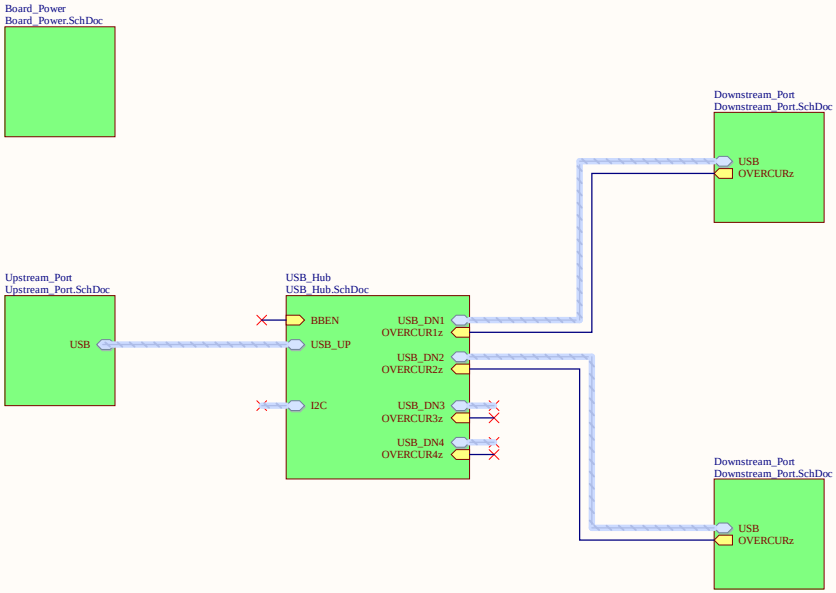

APPROVALS	DATE
ENG: *	
DSN: *	
CHK: *	

REFERENCE DOCUMENTS

BOM: <BOM DOC NO>

ASSY DWG: <ASSY DWG NO>

FAB DWG: <FAB DWG NO>

PCB DWG: <PCB DWG NO>

PROJECT

Altium

PROJECT REVISION: beadcafe DOCUMENT REVISION: 51317915 DESIGN ITEM:

TITLE

USBC Hub

SIZE	CAGE CODE	DWG NO.	REV
B	?????	<SCH DWG NO>	

SCALE: FILE NAME Top.SchDoc SHEET 1 OF 5

<SCH DWG NO> DWG. NO. REV 1 SHT.

THIS DOCUMENT AND THE DATA DISCLOSED HEREIN OR HEREWITH IS THE PROPERTY OF ALTIUM LIMITED AND MAY BE FREELY DISTRIBUTED IN WHOLE. NO RIGHTS ARE RESERVED OR EXPRESS OR IMPLIED WARANTEE GIVEN.

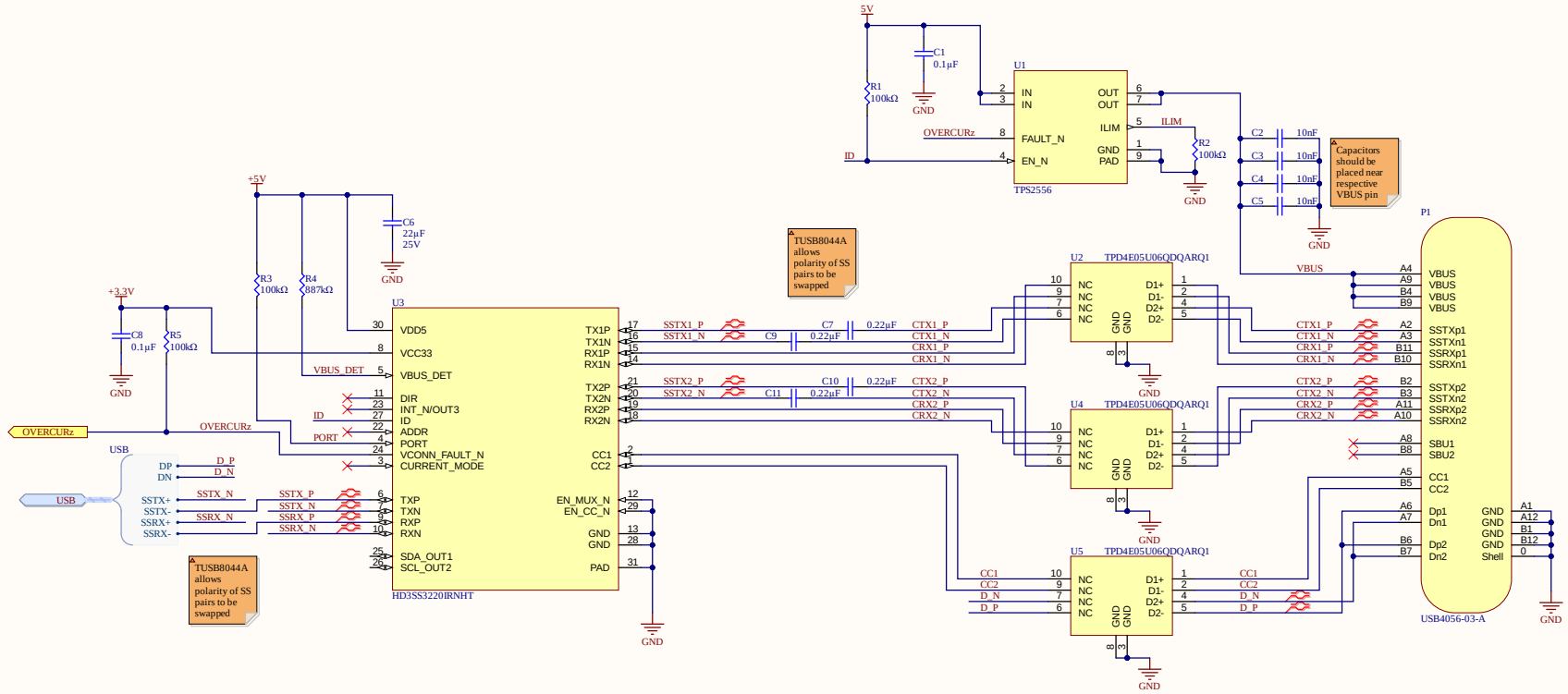

REVISION	DESCRIPTION	DATE	APPROVED

APPROVALS	DATE
ENG: *	
DSN: *	
CHK: *	

REFERENCE DOCUMENTS

BOM: <BOM DOC NO>
ASSY DWG: <ASSY DWG NO>
FAB DWG: <FAB DWG NO>
PCB DWG: <PCB DWG NO>

PROJECT: Altium
PROJECT REVISION: beadcab6
DOCUMENT REVISION: c1b47c60 [Locally Modified]
DESIGN ITEM ID: *
TITLE: Downstream Port

SIZE	CAGE CODE	DWG NO.	REV
B	?????	<SCH DWG NO>	

SCALE:
FILE NAME: Downstream_Port.SchDoc
SHEET 2 OF 5

<SCH DWG NO> REV 2 SHT 2

THIS DOCUMENT AND THE DATA DISCLOSED HEREIN OR HEREWITH IS THE PROPERTY OF ALTIUM LIMITED AND MAY BE FREELY DISTRIBUTED IN WHOLE. NO RIGHTS ARE RESERVED OR EXPRESS OR IMPLIED WARANTEE GIVEN.

REVISION	DESCRIPTION	DATE	APPROVED

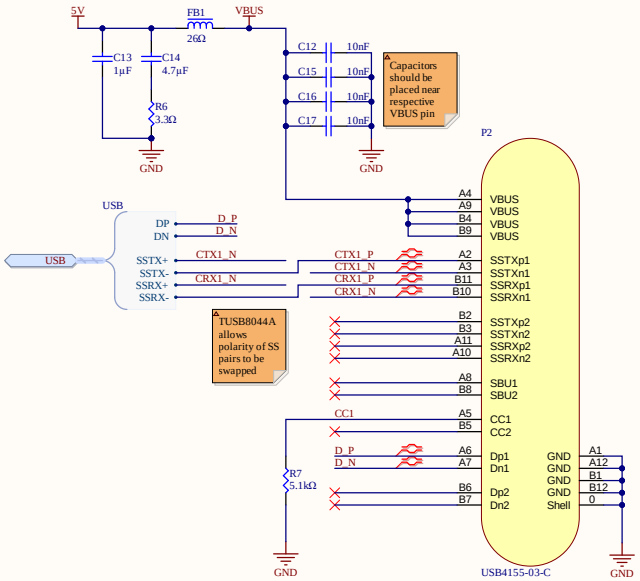

APPROVALS	DATE
ENG: *	
DSN: *	
CHK: *	

REFERENCE DOCUMENTS

BOM: <BOM DOC NO>

ASSY DWG: <ASSY DWG NO>

FAB DWG: <FAB DWG NO>

PCB DWG: <PCB DWG NO>

PROJECT: Altium

PROJECT REVISION: beadcab6 | DOCUMENT REVISION: | DESIGN ITEM: 9a2daar1 [Locally Modified]

TITLE: Upstream Port

SIZE: B | CAGE CODE: ????? | DWG NO. <SCH DWG NO> | REV

SCALE: | FILE NAME: Upstream_Port.SchDoc | SHEET 3 OF 5

PROJECT <SCH DWG NO> DWG. NO. | REV | SHT. 3

THIS DOCUMENT AND THE DATA DISCLOSED HEREIN OR HEREWITH IS THE PROPERTY OF ALTIUM LIMITED AND MAY BE FREELY DISTRIBUTED IN WHOLE. NO RIGHTS ARE RESERVED OR EXPRESS OR IMPLIED WARANTEE GIVEN.

REVISION	DESCRIPTION	DATE	APPROVED

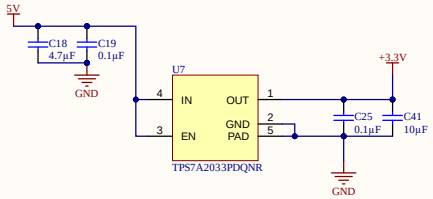

3.3V Buck

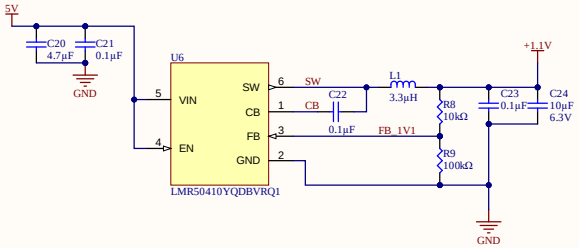

1.1V Buck

APPROVALS	DATE
ENG: *	
DSN: *	
CHK: *	

REFERENCE DOCUMENTS

BOM: <BOM DOC NO>

ASSY DWG: <ASSY DWG NO>

FAB DWG: <FAB DWG NO>

PCB DWG: <PCB DWG NO>

PROJECT: Altium

PROJECT REVISION: beadcab6 | DOCUMENT REVISION: | DESIGN ITEM: cbb21856

TITLE: Board Power

SIZE: B | CAGE CODE: ????? | DWG NO. <SCH DWG NO> | REV

SCALE: | FILE NAME: Board_Power.SchDoc | SHEET 4 OF 5

THIS DOCUMENT AND THE DATA DISCLOSED HEREIN OR HEREWITH IS THE PROPERTY OF ALTIUM LIMITED AND MAY BE FREELY DISTRIBUTED IN WHOLE. NO RIGHTS ARE RESERVED OR EXPRESS OR IMPLIED WARANTEE GIVEN.

REVISION	DESCRIPTION	DATE	APPROVED

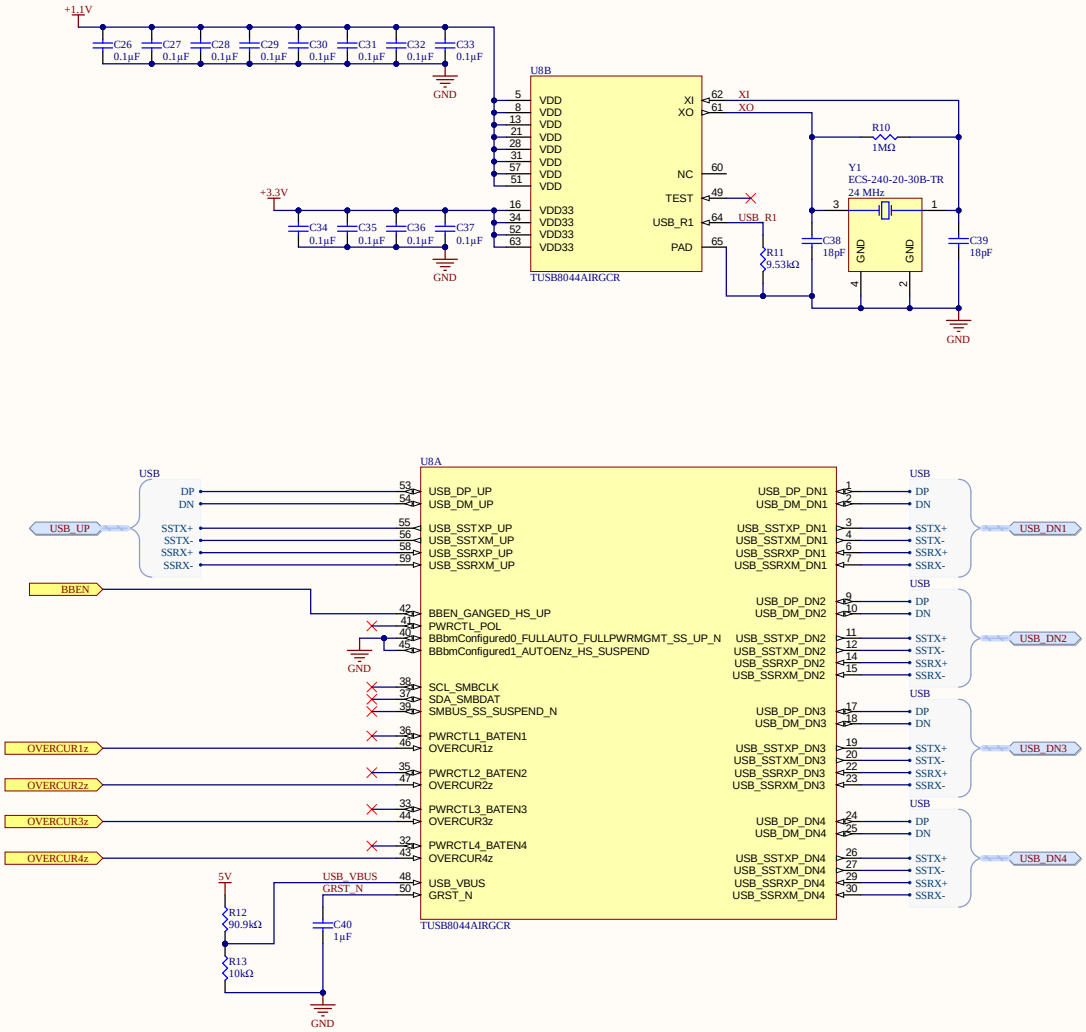

APPROVALS	DATE
ENG: *	
DSN: *	
CHK: *	

REFERENCE DOCUMENTS

BOM:	<BOM DOC NO>
ASSY DWG:	<ASSY DWG NO>
FAB DWG:	<FAB DWG NO>
PCB DWG:	<PCB DWG NO>

PROJECT: Altium

PROJECT REVISION: beadcab6 DOCUMENT REVISION: 9a2daa11 DESIGN ITEM:

TITLE: USB Hub

SIZE	CAGE CODE	DWG NO.	REV
B	?????	<SCH DWG NO>	

SCALE: FILE NAME: USB_Hub.SchDoc SHEET 5 OF 5